ITEM #

MODEL #

NAME #

SIS #

AIA #

Planetary Mixers
Planetary Mixer for Bakery, 30 lt. - Electronic

600171 (DXBB30B)

30 lt planetary mixer, bowl detection device and SOLID BPA free safety screen, with 3 fixed speeds and electronic variable speed. Equipped with spiral hook, paddle, whisk and protection grid. Suitable for bakery preparation

Short Form Specification

Item No.

Suitable for bakery and pastry making, for kneading, blending and whipping operations. Reinforced body for heavy duty use with 18/8 (AISI 302) 30 liter capacity stainless steel bowl. Reinforced transmission and powerful asynchronous motor (1500 W) with 3 fixed speeds (40, 80, 160 rpm) and electronic variable speed (from 30 to 175 rpm). Water proof (IP55) and flat touch button control panel with a timer from 0-59 min. Removable/transparent solid safety screen - made of a bisphenol-A free (BPA) copolyester. Removable and dismantled solid safety screen and stainless steel wire structure. Bowl detection device allows the mixer to switch on only when the bowl and the safety screen are properly installed and positioned together. Kneading: speed 1 or 2 with hook; Blending: speed 2 with paddle; Whipping: speed 3 with whisk. Supplied with 3 tools: spiral hook, paddle and reinforced whisk.

APPROVAL:

Main Features

- Professional beater mixer designed to withstand the strong demands of bakery and pastry making.
- Maximum capacity (flour, with 60% of hydration) 8 kg.
- Waterproof touch button control panel with timer, speed setting and display.
- Delivered with:
  - Spiral Hook, Paddle, Reinforced Whisk and Mixing Bowl for 30 lt
- Kneading speed: "1" or "2" with hook.
- Mixing speed: "2" with paddle.
- Emulsifying speed: "3" with whisk.
- Raising and lowering of the bowl controlled by lever with an automatic locking of the bowl when in the raised position.
- Bowl detection device allows the mixer to switch on only when the bowl and the solid safety screen are properly installed and positioned together.
- Solid BPA-free safety screen, covering the stainless steel wire one, limits the flour and unsafe dust particles when used in bakery and pastry preparation.
- Removable chute to add ingredients while working available as standard.

Construction

- Reinforced body, feet and transmission for heavy duty operations.
- 302 AISI Stainless steel bowl - 30 lt. capacity.
- Water protected planetary system (IP55 electrical controls, IP23 overall machine).
- 3 fixed speeds: 40, 80 and 160 rpm.
- Power: 1500 watts.
- The solid safety screen and the stainless steel wire structure are both removable and dismantled for cleaning and are dishwasher safe.
- Adjustable feet to perfect stability.
- Electronic speed variator (10 speeds available from 30 to 175 rpm)

Planetary Mixers
Planetary Mixer for Bakery, 30 lt. - Electronic

Front

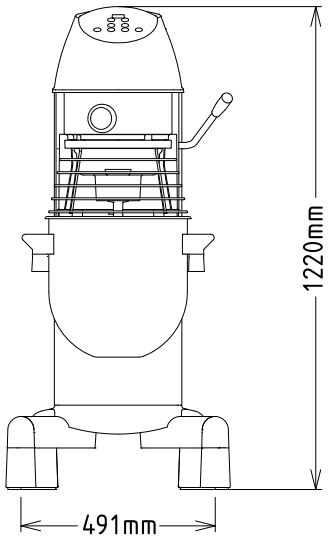

Side

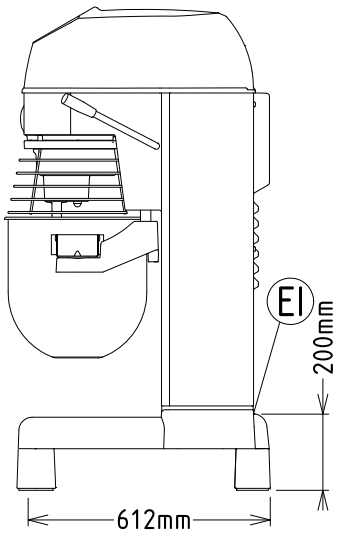

EI = Electrical inlet (power)

Top

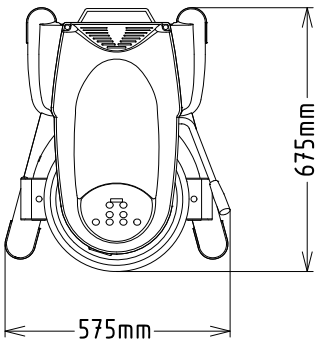

Electric	
Supply voltage:	
600171 (DXBB30B)	200-240 V/1N ph/50/60 Hz
Electrical power max.:	1.5 kW
Total Watts:	1.5 kW
Capacity:	
Performance (up to):	8 kg/Cycle
Capacity:	30 litres
Key Information:	
External dimensions, Width:	575 mm
External dimensions, Depth:	675 mm
External dimensions, Height:	1220 mm
Shipping weight:	120 kg
Cold water paste:	8 kg with Spiral hook
Egg whites:	50 with Whisk

The company reserves the right to make modifications to the products without prior notice. All information correct at time of printing.

2024.10.07

Included Accessories

- 1 of Bowl 30 lt mixer PNC 650123
- 1 of Spiral Hook 30 lt PNC 653161
- 1 of Paddle 30 lt PNC 653165
- 1 of Reinforced Whisk 30 lt (for heavy duty use) PNC 653253

Optional Accessories

- Bowl 30 lt mixer PNC 650123 ❑
- 10 lt reduction kit (bowl, spiral hook, paddle, whisk) and removable spout for 30 lt planetary mixers PNC 650124 ❑
- 20 lt reduction kit (bowl, spiral hook, paddle, whisk) for 30 lt planetary mixers PNC 650125 ❑
- Spiral Hook 30 lt PNC 653161 ❑
- Paddle 30 lt PNC 653165 ❑
- Whisk 30 lt PNC 653166 ❑
- Reinforced Whisk 30 lt (for heavy duty use) PNC 653253 ❑
- Kit wheels for 20/30/40 litre planetary mixers (only XB models) PNC 653552 ❑
- Bowl trolley for 30 lt planetary mixers (cannot be used with wheel kit 653552) PNC 653562 ❑

The company reserves the right to make modifications to the products without prior notice. All information correct at time of printing.

2024.10.07